Light and Ventilation Th h ight f id pati wall must pr vid that th ope r f th l nger wall d o dditi nal wall i equal t t l st 6 % (p rc nt) th r a below minimum f " f ea h wall (m asur d from th floor) requir d by th current dditi n f th Uniform Building Cod Where wall n not be lowered (For Exampl Atrium) th ov r nly cover 6 % f th r with 5% l ft uncover d nd unobstructed

Area to be Covered Covers will only c ver th p ti r defined by th pati l b wall r indi ted thi Standard Pl n

Overhangs Overhang dimensi n will be hown on thi drawing or det rminded by the M rmit nd nspecti Department

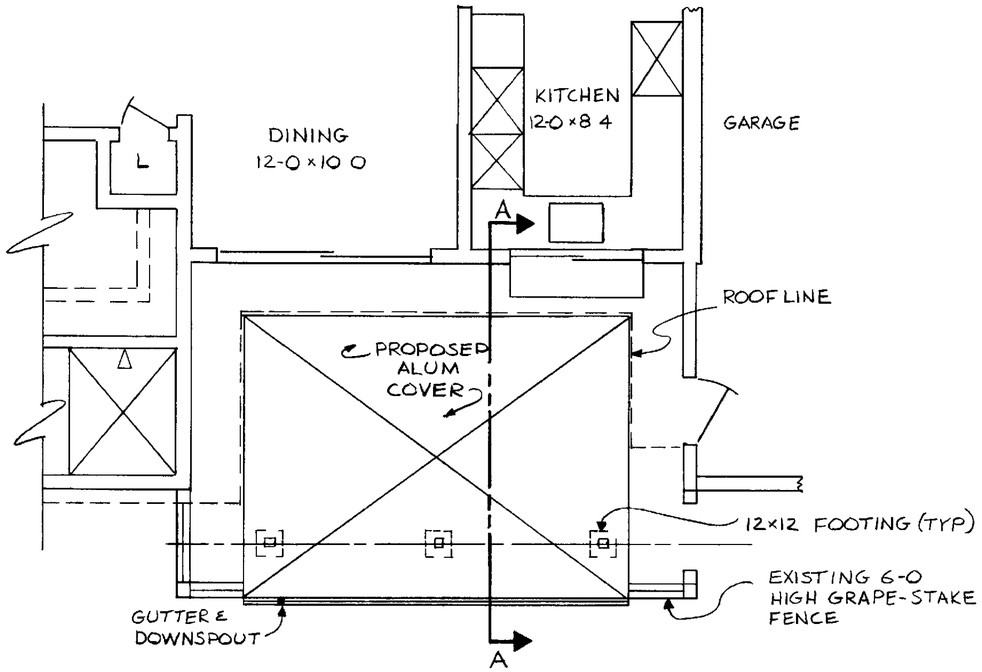

PARTIAL FLOOR PLAN

SCALE 1/4"=1 0

2 **Aluminum Cover Posts** All posts to be n l b nd/ r insid f pati wall Po t may be on wall ly if uch wall h been con tructed nd inspected f r such pplicati Post h ll be f luminum squar type r t match xisting post f ov rs n th building

Fascia asci f cover t match wood trim c lor

Gutters and Downspouts Gutter nd downspouts r to be painted t match the surf c t which they may be ttached Downspout shall not empty int other pati ar

Skylight Panels (Aluminum Cover Only) lastic pan l produced by th manufacturer may be installed

Aluminum Balcony Covers Balcony covers shall have luminum quar po ts only nd luminum f s ia color t match wood trim r stucc a defined by P M P rmit nd nspecti n Department

9 **Aluminum Eyebrow Covers** Eyebrow covers may not have kylight panel nd will not project from th building beyond thr f t (") Cover col r to be determined by P C M P rmit nd nspecti Department

Aluminum Connections Contra tor to supply U B nn ction for ICBO ppr v d luminum covers

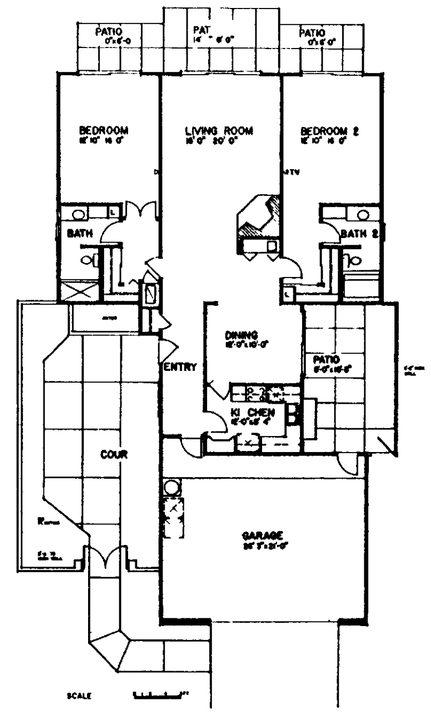

TRINIDAD(C11)

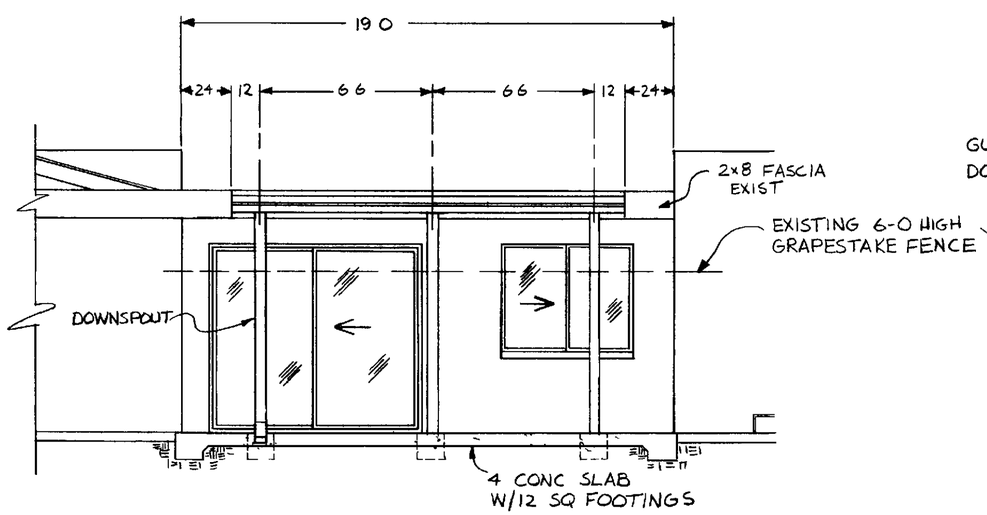

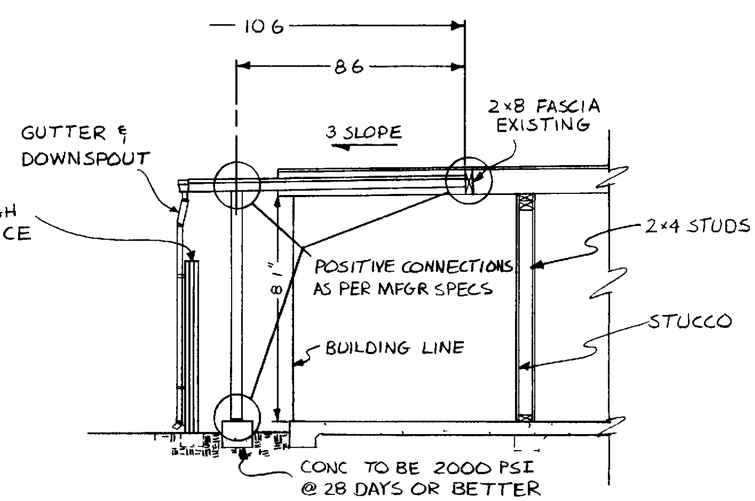

GENERAL NOTES

Th s dr wing nd p ifi ti ns d pi th re re gal instrument servi f r u th ow r

r f io Community Management
Box
Laguna Hil CA 65
(Hereafter know M)

nt for Leisur World Laguna Hi Calif r i nd uth rized repre ntative th d ignat d r p rty nly nd remai th le pr perty th d ign r Unauth ri d us i prohibited

County Street Address:

Tract No. . Lot No.

Insurances: C rtai insuranc ( ) re requir d ut ined by th M Permit nd n p cti n Department h uld they r u t uch insuranc the p li i ust be tak ut i ow r nam

Guarantees, warranties, etc: Th w rk ch trade hall be u rant d by ontra tor

Cutting, patching, etc: h trad hal t ll im d th ir ow utting patching fitting t k ev ral parts com eth r pr pe ly fit nd to re iv r t b re ived by th work f ther trad

Clean-UP: All trad shall t ll ime k e the premis fr from umulati wa t material r rubbi h cau ed by h r w rk C ntract r i r p n ible for remova d bri nd xc t rial nd mu t v w rk r br om l both daily nd up compl tio w rk U f ommunity dump ter i n t permitted

Codes: ll w rk shall comply with th curr nt editio of th Unif rm uilding Cod st t cal cod

General Notes: ch trad hall be h ld r p nsibl f r knowledg f n r not i t d her i r ewher within h drawing

Fees: All p rmit nd la check f hall be tak out nd paid f r by th r id nt nd/ r hi c ntract r

Interpretation: i imp rativ that th ntra t r v rify ll dim n i n nd c nditions how th drawings t h job it pri r t comm n ing nstru ti nd inf rm th M P rmit nd Inspecti D p rtment ny dis rep n i conflicts r omi i n b f r beginning/pr eding with th work

Dimensions: Dimen i ns have precedenc over cal

Manufacturer s Directions: Wh re manufa turer dir cti ns/sp ificati n r alled f r they hall be n id red part h drawings

Construction Regulations: Th drawings nd work perf rm d h ll t ll time be overned by he p li bi pr vi i n fed ral t t nd l w

Facilities: Temporary il t shall be provided per o uthoritie

Barricades: C nstructi n barricad i required hall nf rm t th r quirem nt oc l uthoriti For fety h publ hal be protect d nd/ r shi lded from th nstru ti work/ ite t ll ti during th c ntract

Structure: Th tructur i d igned tabl unit fter compon nt part re i pl Ther f r nt tor shall provid ll shoring and bra ing r quir d insur th tability nd/ r ll parts during c n truoti

Standards: All work hall be perf rmed t th be t standard pr ctic th rad ( ) All c tract r dama d w rk hall be r laced t the contract r xp n

Construction Materials: ll mat ri l shall be standard grad r bett r u th rwi noted

Discrepancies: Any discr pan ie between plan bui ding nd c l ood requirement hat may ffect th in tallati f bricati r ov rall work i ny way h b immediat ly br ught t the tt ntio M rmit nd n p cti n partment by the ntractor

Work Hours: N w rk shal omm n pri r t m nd n w rk wi be permitt d ft r p m M nday thr ugh Frid y turday work hould be h ld t inimum nd n work whats v r o unday

GENNOT /L

PATIO COVER ALUMINUM	160
C11 & C11r	
APPROVAL TERRY WHITE	
DRAWN CHRIS MANGLES	
DATE (5/21/86) 7/19/93	

Professional Community Management